B

VANE PUMPS

	Pump Type	Graphic Symbols	Output Flow at 1200 r/min at No-Load (U.S.GPM: .3 .5 1 2 5 10 20 50 100 200; L/min: 1 2 5 10 20 50 100 200 500 800)	Maximum Operating Pressure MPa (PSI)	Page
Fixed Displacedment	"PV2R" Series Single Pumps		PV2R1 PV2R2 PV2R3 PV2R4	21 (3050)	163
	"PV2R4A" Series Single Pumps		PV2R4A	17.2 (2500)	177
	"PV2R" Series Double Pumps		Small Volume (PV2R1) (PV2R2) (PV2R3); Large Volume (PV2R2) (PV2R3) (PV2R4)	21 (3050)	181
	"PV2R24A/34A" Series Double Pumps		Small Volume PV2R2 PV2R3; Large Volume PV2R4A	21 (3050) 17.2(2500)	196

Hydraulic Fluids

1. Type of hydraulic fluids

Any type of hydraulic fluids listed in the Table 1 below can be used. However, the specifications of the pumps such as maximum pressure and maximum pump speed may be changed according to the type of hydraulic fluids to be used. For details, please refer to the specifications of the pump concerned.

● Hydraulic fluids (Table 1)

Petroleum Base Oils		Use anti-wear type oils or R & O (Rust and Oxidation inhibitor) type oils (equivalent to ISO VG32 or 46).
Synthetic Fluids		Use phosphate ester type fluids. When phosphate ester type fluid is used, prefix "F-" to the model number because the special seals (fluororubber) are required to be used.
Water Containing Fluids	Water-Glycols	Standard pumps can be used without conditions. However, if any type other than those in Table 2 is used, the maximum operating pressure is limited.
	Water in Oil Emulsions	Standard pumps can be used without conditions.

● Anti-wear type water-glycols (Table 2)

Fluid Manufacturer	Commercial Trade Name
Exxon Mobil	Mobil Nybac FR 200 D
JAPAN ENERGY CORP.	JOMO Hydria G
NIPPON OIL CORPORATION	HYRANDO FRX 46
Showa Shell Sekiyu K. K.	Shell HFC Fluid 46
MATSUMURA OIL RESEARCH CORP.	HYDOL HAW
COSMO OIL LUBRICANTS CO. , LTD.	COSMO FLUID HQ 46 COSMO FLUID GS 46

2. Fluid viscosity and temperature

Use the hydraulic fluids which satisfy the recommended viscosity and oil temperature given in the Table 3 below. However, please note that if any of the pumps listed in the table 4 is started at low speed, the maximum fluid viscosity is limited.

● Fluid viscosity and temperature (Table 3)

Fluid	Temperature °C (°F)	Viscosity mm^2/s(SSU)
Petroleum Base Oils	0-70 (32-158)	20-400 (100-1800)
Phosphate Esters		
Water Glycols	0-50 (32-122)	
Water in Oil Emulsions	5-50 (41-122)	

● Maximum viscosity for low start-up speed (Table 4)

Pump Type	Start-up Speed r/min	Max. Viscosity mm^2/s (SSU)
PV2R1 PV2R12 PV2R13 PV2R14	750	100 (455)
	950	200 (910)
PV2R2 PV2R23 PV2R24 PV2R24A	600	100 (455)
	950	200 (910)

3. Control of contamination

Contamination of hydraulic fluids results in pump failures and reduced pump lives. Carry out sufficient contamination control for hydraulic fluids and keep contamination level within NAS class 12.
Also, use a 100 µm (150-mesh) tank filter on the suction side, more than 50 mm (2 in.) away from the tank bottom.

Instructions

1. Alignment of shaft

Employ a flexible coupling whenever possible, and avoid any stress from bending or thrust.
Maximum permissible misalignment is less than 0.1 mm (.004 inches) TIR and maximum permissible misangular is less than 0.2°.

2. Suction pressures

Set the suction pressure at pump inlet port at the value given in the table below. Furthermore, use the pipes in the suction side having the diameter as indicated on the installation drawings. In case where the pump is installed on the tank or at the position higher than the tank top cover, the height of the suction port of the pump should be less than 1 metre (3.3 ft.) from the oil level {less than 0.8 metre (2.6 ft.) in case of using phosphate ester fluids or water containing fluids}.

Pump Type		Suction Pressure		
		Minimum		Maximum
		Petroleum base oil	Phosphate ester type fluid Water containing fluid	
"PV2R" Series Single Pumps	PV2R1 PV2R2	-20 kPa (5.9 in. Hg Vacuum)	-16 kPa (4.7 in. Hg Vacuum)	+30 kPa (+4.3 PSIG)
	PV2R3 PV2R4 PV2R4A	-20 kPa★ (5.9 in. Hg Vacuum)★		
"PV2R" Series Double Pumps	PV2R12	-20 kPa (5.9 in. Hg Vacuum)		
	PV2R13 PV2R23 PV2R33 PV2R14 PV2R24 PV2R34 PV2R24A PV2R34A	-20 kPa★ (5.9 in. Hg Vacuum)★		

★ In relation to the rotating speed of the pump, the minimum suction pressure may be restricted for a certain nominal displacement. For details, please refer to the specifications of the pump concerned.

3. Precautions at starting

At an initial operation or at an operation after a long rest, the pump may have difficulty in sucking up fluid. In such cases, an air bleed valve should be installed beforehand on the discharge side (model No. ST1004-∗-10∗, see page 820), or discharge air by slightly slackening the connection on the discharge side. At starting, operate the pump intermittently as far as possible with no load.
For fluid viscosity at starting, see the item of "Hydraulic Fluids".

4. Other precautions

If a pump is used at speed below 1200 r/min, install the pump with the suction port upside so that the pump can suck up fluid easily at starting.

Interchangeability in Installation between Current and New Design

The models shown below have been changed in design.

Name	Model Numbers		Interchange-ability in Installation	Major Changes
	Current	New		
"PV2R1" Series Single Pumps	PV2R1-*-*-RAA-40* / 41*	PV2R1-*-*-RAA-42*	Yes	● Lower noise level
"PV2R2" Series Single Pumps	PV2R2-*-*-RAA-40*	PV2R2-*-*-RAA-41*	Yes	● Lower noise level
"PV2R3" Series Single Pumps	PV2R3-*-*-RAA-30*	PV2R3-*-*-RAA-31*	Yes	● Lower noise level
"PV2R12" Series Double Pumps	PV2R12-*-*-*-REAA-40* / 41*	PV2R12-*-*-*-REAA-42*	Yes	● Lower noise level
"PV2R13" Series Double Pumps	PV2R13-*-*-*-RAAA-40* / 41*	PV2R13-*-*-*-RAAA-42*	Yes	● Lower noise level
"PV2R14" Series Double Pumps	PV2R14-*-*-*-RAAA-30* / 31*	PV2R14-*-*-*-RAAA-32*	Yes	● Lower noise level
"PV2R23" Series Double Pumps	PV2R23-*-*-*-REAA-40*	PV2R23-*-*-*-REAA-41*	Yes	● Lower noise level
"PV2R33" Series Double Pumps	PV2R33-*-*-*-RAAA-30*	PV2R33-*-*-*-RAAA-31*	Yes	
"PV2R24" Series Double Pumps	PV2R24-*-*-*-RAAA-30*	PV2R24-*-*-*-RAAA-31*	Yes	
"PV2R34" Series Double Pumps	PV2R34-*-*-*-REAA-30*	PV2R34-*-*-*-REAA-31*	Yes	

A

PISTON PUMPS

Yuken offers low noise/high efficiency, swash plate type variable displacement piston pumps. These pumps have been developed by Yuken's leading hydraulic engineers and provide a diverse lineup to meet a wide range of application requirements.

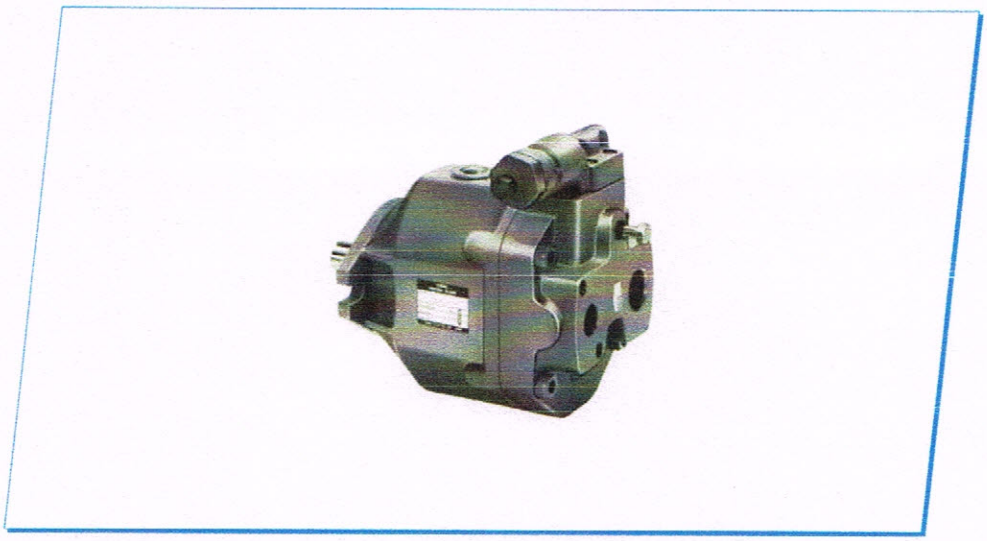

"AR" Series Variable Displacement Piston Pumps

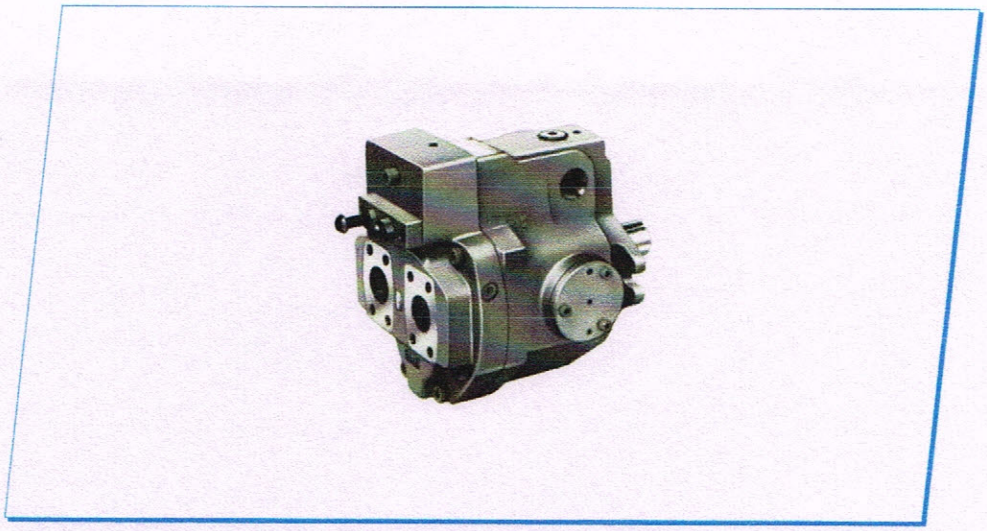

"A" Series Variable Displacement Piston Pumps

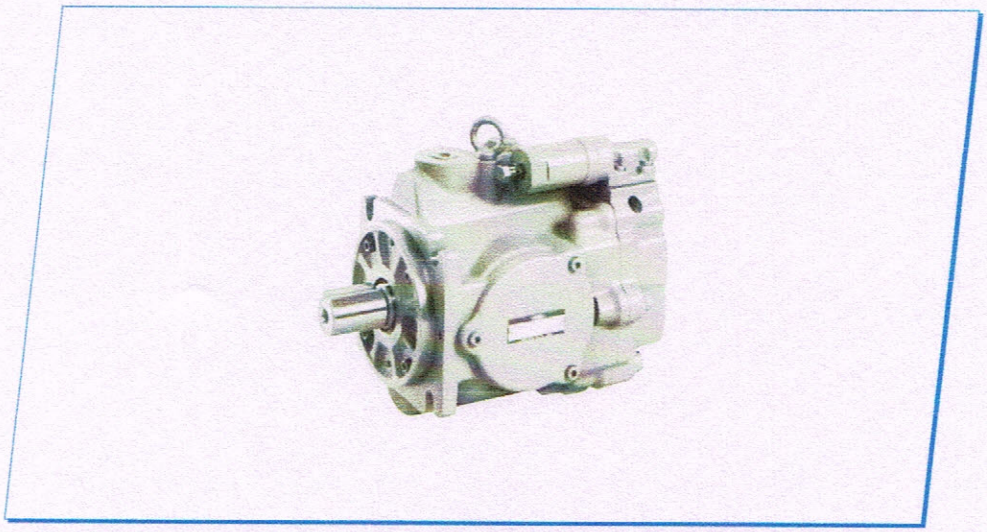

"A3H" Series Variable Displacement Piston Pumps

"AR" Series Variable Displacement Piston Pumps

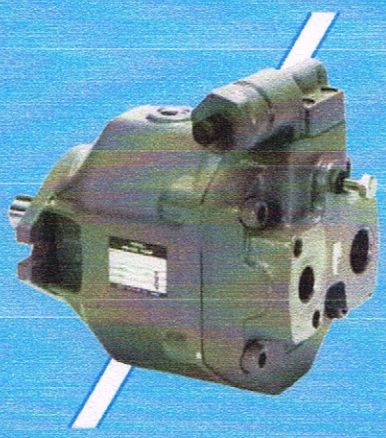

AR16
Axial Port Type

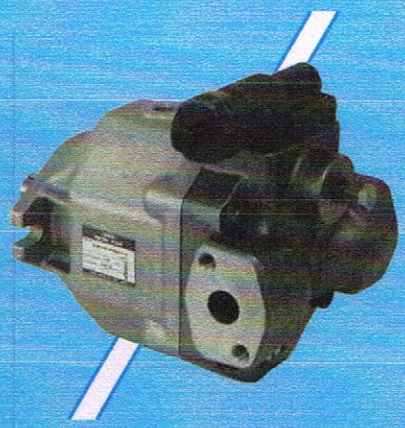

AR16
Side Port Type

"AR" series variable displacement pump has been developed which the aim of even further the quietness in operation, smaller in size and lighter in mass and based on Yuken technology and engineering which put on market the "A" series pump which has a reputation for its quiet operation and high efficiency.

Pump Type	Graphic Symbol	Geometric Displacement (cu. in./rev: .1, .2, .5, 1, 2, 5, 10, 15 — cm³/rev: 1, 2, 5, 10, 20, 50, 100, 200, 300)	Maximum Operating Pressure MPa (PSI)	Page
"AR" Series Variable Diplacement Piston Pumps	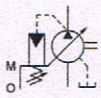	AR16 AR22	16 (2320)	18

Hydraulic Fluids

Hydraulic Fluids

Use petroleum base oils such as anti-wear type hydraulic oils or R & O (Rust and Oxidation inhibitor) type hydraulic oils equivalent to ISO VG-32 or 46. The recommended viscosity range is from 20 to 400 mm^2/s (98 to 1800 SSU) and temperature range is from 0 to 60 °C (32 to 140 °F), both of which have to be satisfied for the use of the above hydraulic oils.

Control of Contamination

Due caution must be paid to maintaining control over contamination of the operating oil which can otherwise lead to breakdowns and shorten the life of the unit.
Please maintain the degree of contamination within NAS Grade 10.
The suction port must be equipped with at least a 100 µm (150 mesh) reservoir type filter and the return line must have a line type filter of under 10 µm.

Instructions

Mounting

When installing the pump the filling port should be positioned upwards.

Alignment of Shaft

Employ a flexible coupling whenever possible, and avoid any stress from bending or thrust.
Maximum permissible misalignment is less than 0.1 mm (.004 inches) TIR and maximum permissible misangular is less than 0.2°.

Suction Pressure

Permissible suction pressure at inlet port of the pump is between -16.7 and +50 kPa (5 in.Hg Vacuum and 7 PSIG).
For piping to the suction port, use the pipes of the same diametre as that of the specified pipe flange to be used.
Make sure that the height of the pump suction port is within one metre (3.3 ft) from the oil level in the reservoir.

Hints on Piping

When using steel pipes for the suction or discharge ports, excessive load from the piping to the pump generates excessive noise.
Whenever there is fear of excessive load, please use rubber hoses.

Suction Piping

In case the pump is installed above the oil level, the suction piping and suction line filter should be located lower than the pump position to prevent air in the suction line.

Drain Piping

Install drain piping according to the chart and ensure that pressure within the pump housing should be maintained at a normal pressure of less than 0.1 MPa (14.5 PSI) and surge pressure of less than 0.5 MPa (72.5 PSI).
Length of piping should be less than 1 m (3.3 ft.), and the pipe end should be submerged in oil.
In case AR16 and AR22 pump, a screw-in torque of fitting is 40 to 50 Nm (354 to 443 IN.1bs.). Do not apply bending and thrust torque to the fitting.

[Recommended Drain Piping Size]

Model	Fitting Size		Inside Dia. of Pipe
	Japnese Std. "JIS" & European Design Std.	N.American Design Std.	
AR16, AR22	3/8	SAE #8	10 mm (.39 in.)
	[Inside Dia. 8.5 mm (.33 in.) or more]		

Bleeding Air

It may be necessary to bleed air from pump case and outlet line to remove causes of vibration. An air bleed valve (Model Number ST1004-*-10*, Page 820) is recommended for this purpose.

Starting

Before first starting, fill pump case with clean operating oil via the filling port.
In order to avoid air blockage when first starting, adjust the control valves so that the discharged oil from the pump is returned direct to the reservoir or the actuator moves in a free load.

[Volume of Pre-fill Oil Required]

Model	Volume cm^3 ($in.^3$)
AR16 AR22	430 (26.2)

Setting Discharge Pressure and Delivery

At the time of shipment, the unit has been preset to maximum delivery and minimum discharge pressure.
Adjust the preset delivery and pressure to meet your system requirements.

Adjustment of Discharge Pressure

Turning the adjustment screw clockwise, increases pressure.

[Volume adjusted by each full turn of the pressure adjustment screw]

Model Numbers	Adjustment Volume MPa (PSI)
AR16/AR22-FR01B	2.9 (420)
AR16/AR22-FR01C	5.4 (780)

Adjustment of Delivery

Turning the delivery adjustment screw clockwise, decreases delivery.

[The minimum adjustable flow and adjustable volume of each full turn of the delivery adjustment screw]

Model Numbers	Adjustable volume with each full turn of the adjustment screw cm^3/rev (cu.in./rev)	Minimum adjustable flow cm^3/rev (cu.in./rev)
AR16	1.5 (.092)	6 (.366)
AR22	2.1 (.128)	8.5 (.519)